DATA SHEET
7CP PLUNGER PUMPS

The Pumps with Nine Lives

Stainless Steel Models	Stainless Steel Flushed Models	Gearbox Model
7CP6111CS, 7CP6171CS	**7CP6111CCS, 7CP6171CCS**	**7CP6111CSG1**

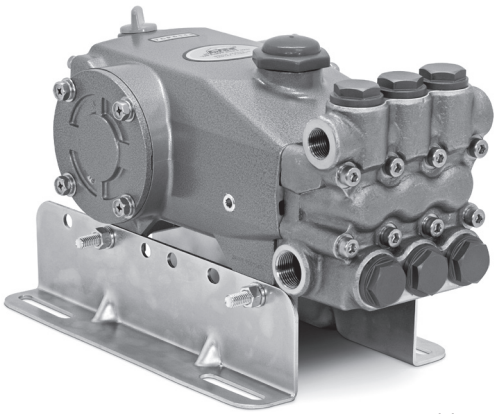

Model 7CP6171CS Shown
(Rails sold separately)

FEATURES

- Stainless Steel manifold head.
- Flexible coupling/bell housing, gearbox and belt drive options provide flexibility with a compact footprint.
- Gearbox model available with 1" hollow shaft to fit most common engines.
- Special flushed "C" manifold with 7CP6111CCS and 7CP6171CCS permits external flush for added cooling with high-temperature liquids and lubrication with low lubricity-liquids.
- Standard NBR seals with alternative options for temperature and chemical compatibility.

SPECIFICATIONS	U.S. Measure	Metric Measure
7CP6111CS, 7CP6111CCS		
Flow	10.5 gpm	40 lpm
Pressure Range	100 – 2000 psi	6.9 – 138 bar
Pump RPM*	1750 rpm	1750 rpm
Stroke	0.854"	21.7 mm
7CP6171CS, 7CP6171CCS		
Flow	10.5 gpm	40 lpm
Pressure Range	100 – 2000 psi	6.9 – 138 bar
Pump RPM*	1450 rpm	1450 rpm
Stroke	1.024"	26 mm
7CP6111CSG1		
Flow	10.0 gpm	38 lpm
Pressure Range	100 – 2000 psi	6.9 – 138 bar
Engine RPM	3400 rpm	3400 rpm
Stroke	0.854"	21.7 mm

*Pump is minimum 100 RPM

COMMON SPECIFICATIONS	U.S.	Metric
Inlet Pressure Range	Flooded – 70 psi	Flooded – 4.8 bar
Max. Liquid Temperature (NBR)	140° F	60° C
Alternative seals available for high temperature up to 190° F		
Bore	0.866"	22 mm
Crankcase Capacity	38 oz.	1.15 l
Inlet Ports (2)	¾" NPT(F)	¾" NPT(F)
Discharge Ports (2)	½" NPT(F)	½" NPT(F)
Flushing Ports (2) (7CP6111CCS, 7CP6171CCS)	⅛" NPT(F)	⅛" NPT(F)
Shaft Diameter	0.945"	24 mm
Weight (7CP6111CS, 7CP6171CS)	29.1 lbs.	13.2 kg
Weight (7CP6111CSG1)	38.6 lbs.	17.5 kg
Dimensions (Pump)	13.46 x 9.25 x 6.89"	342 x 235 x 175 mm
Dimensions with Gearbox	13.46 x 12.24 x 6.97"	342 x 311 x 177 mm

ALTERNATIVE SEAL CONFIGURATION

MATERIAL	SUFFIX CODE	MAXIMUM TEMPERATURE	
NBR	—	140° F	(60° C)
FPM	.0110	180° F	(82° C)
EPDM	.0220	160° F	(71° C)
HT	.3000	180° F	(82° C)
STHT	.3400	190° F	(88° C)

See **Tech Bulletin 002** for inlet conditions and RPM at high temperature.

DETERMINING THE PUMP R.P.M.

$$\frac{\text{Rated gpm}}{\text{Rated rpm}} = \frac{\text{"Desired" gpm}}{\text{"Desired" rpm}}$$

DETERMINING THE REQUIRED H.P.

$$\text{HP (Electric Brake)} = \frac{\text{gpm x psi}}{1460}$$

DETERMINING MOTOR PULLEY SIZE

$$\frac{\text{Motor Pulley O.D.}}{\text{Pump rpm}} = \frac{\text{Pump Pulley O.D.}}{\text{Motor rpm}}$$

Refer to pump **Service Manual** for repair procedure and additional technical information.

PARTS LIST

ITEM	P/N	MATL	DESCRIPTION	QTY
5	49651	S	Screw, HHC Sems (M8 x 20) (See Tech Bulletin 074)	8
8	131405	ALE	Cover, Bearing (See Tech Bulletin 123)	1
9	49503	FBR	Shim, Split, 2-Piece, Outer (See Tech Bulletin 123)	0-2
10	12393	NBR	O-Ring, Bearing Cover – 70D	2
11	49190	NBR	Seal, Oil Crankshaft	1/2
12	49504	S	Shim, Split, 2-Piece, Inner (See Tech Bulletin 123)	0-2
15	63479	STL	Bearing, Roller	2
20	48727	TNM	Rod, Connecting Assembly [2/03] (See Tech Bulletin 074)	3
25	**49498**	FCM	Crankshaft, Single-End (M21.7) (7CP6111CS, 7CP6111CCS, 7CP6111CSG1)	1
	49649	FCM	Crankshaft, Single-End (M26) (7CP6171CS, 7CP6171CCS)	1
30	131407	ALE	Cover, Blind Bearing (See Tech Bulletin 123)	1
32	43211	ABS	Cap, Oil Filler	1
33	14177	NBR	O-Ring, Oil Filler Cap – 70D	1
36	129343	RBR	Gasket, Flat	1
37	92241	PC	Gauge, Oil, Bubble with Gasket – 80D (See Tech Bulletin 074)	1
38	44428	NBR	Gasket, Flat, Oil Gauge – 80D	1
39	49948	ABS	Stick, Dip (See Tech Bulletin 130)	1
40	92538	S	Screw, HHC Sems (M6 x 16) (See Tech Bulletin 074)	4
48	25625	STCP	Plug, Drain (¼" x 19BSP)	1
49	23170	NBR	O-Ring, Drain Plug – 70D	1
50	131403	ALE	Cover, Rear (See Tech Bulletin 123)	1
51	14030	NBR	O-Ring, Rear Cover – 70D	1
53	131400	ALE	Crankcase (See Tech Bulletin 123)	1
64	46969	CM	Pin, Crosshead	3
65	49637	SS	Rod, Plunger	3
70	48281	NBR	Seal, Oil Crankcase	3
75	43328	S	Slinger, Barrier	3
90	48559	CC	Plunger, Ceramic (M22 x 55)	3
95	49639	SS	Stud, Plunger Retainer (M6 x 50)	3
96	43235	PTFE	Back-up Ring, Plunger Retainer	3
97	17399	NBR	O-Ring, Plunger Retainer – 80D	3
98	44041	SS	Gasket	3
99	44031	SS	Retainer, Plunger (M6) (See Tech Bulletin 074)	3
100	46964	NY	Retainer, Seal	3
106	49644	NBR	Seal, LPS with SS-Spring	3
120	49643	SS	Case, Seal	3
121	13984	NBR	O-Ring, Seal Case – 70D	3
127	48278	STG	V-Packing	6
128	49646	SS	Adapter, Male	3
162	43248	PTFE	Back-up Ring, Seat	6
163	43249	NBR	O-Ring, Seat – 80D	6
164	44037	SS	Seat	6
166	44038	SS	Valve	6
167	44039	SS	Spring	6
168	44564	PVDF	Retainer, Spring	6
172	17617	NBR	O-Ring, Valve Plug – 90D	6
174	49293	SS	Plug, Valve (See Tech Bulletin 074)	6
185	**49641**	SS	Head, Manifold	1
	49972	*SS*	*Head, Manifold Flushed (⅛" Flushed Port)*	*1*
188	49647	S	Screw, HSH (M8 x 70) (See Tech Bulletin 074)	8
500	***8081***	—	*Gearbox 1" Shaft (See Individual Data Sheet)*	*1*

Bold print part numbers are unique to a particular pump model.

Italics are optional items. [ ] Date of latest production change. R Components comply with RoHS Directive.

*Review individual parts in each kit for material code identification.

For additional technical information see www.catpumps.com/literature/tech-bulletins.

MATERIAL CODES (Not Part of Part Number): ABS=ABS Plastic ALE=Aluminum Epoxy CC=Ceramic CM-Chrome-moly EPDM=Ethylene Propylene Diene Monomer F=Cast Iron FBR=Fiber FCM=Forged Chrome-moly FPM=Fluorocarbon NBR=Medium Nitrile (Buna-N) NY= Nylon PC=Poly Carbonate PE=Polyethlene PTFE=Pure Polytetrafluoroethylene PVDF=Polyvinylidene Fluoride RBR= Rubber S=304SS SS=316SS ST=Special PTFE STG=Special Blend PTFE White STHT=Special PTFE High Temp STL=Steel STCP=Steel/Chrome Plated STZP=Steel/Zinc Plated TNM=Special High Strength

Standard and optional Seal Kits and Valve Kits listed on pages 3 and 4. Optional Parts and Accessories and Service parts listed on Page 3.

EXPLODED VIEW

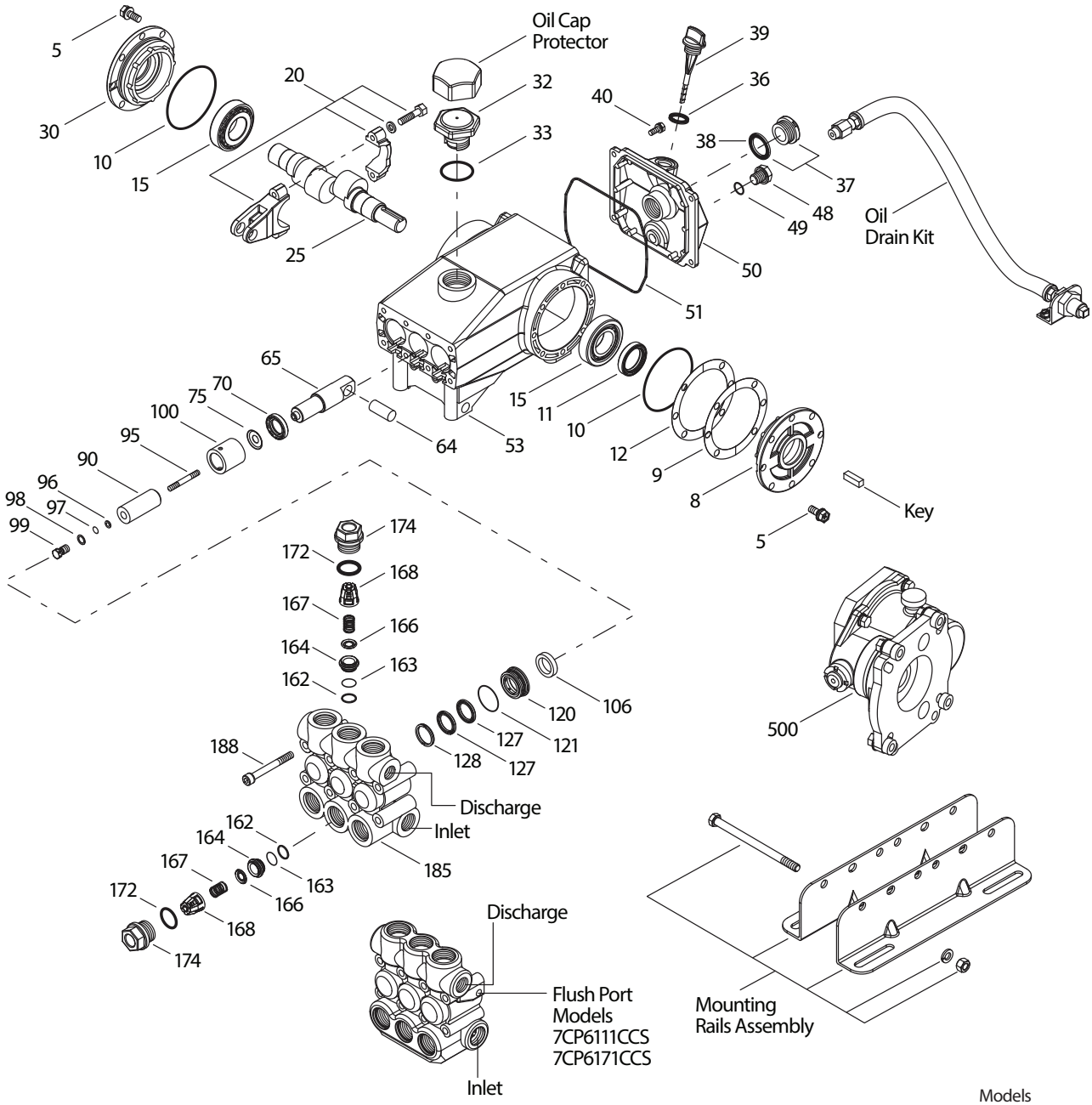

Models
7CP6111CS, 7CP6111CCS
7CP6171CS, 7CP6171CCS
7CP6111CSGI

June 2020

OPTIONAL PARTS AND ACCESSORIES

PART	DESCRIPTION	QTY
30067	Key (M8 x 7.5 x 25)	1
30613	Mount, Rail Assembly (5.75" See Dimensional Drawing)	1
76513	Mount, Rail Assembly (6.25" See Dimensional Drawing)	1
828710	Protector, Oil Cap	1
34334	Kit, Oil Drain	1
30206	Pulley, 10" 2 Groove, "H"	1
33000	Hub, "H" 24mm	1
30696	Plier, Reverse	1

SERVICE PARTS

PART	DESCRIPTION	QTY
76933	Kit, Seal – Standard NBR	1
76387	Kit, Valve – Standard NBR	2
6107	Oil, Bottle (21 oz.)	1 - 2
6119	Lubricant, Anti-Seize (2 oz)	1
6124	Gasket, Liquid (3 oz)	1
818456	Head, Complete – with NBR Seals and O-Rings (Models 7CP6111CS, 7CP6111CSG1, 7CP6171CS)	1

Kits - FPM (.0110), EPDM (.0220), STHT (.3400) listed on Page 4.

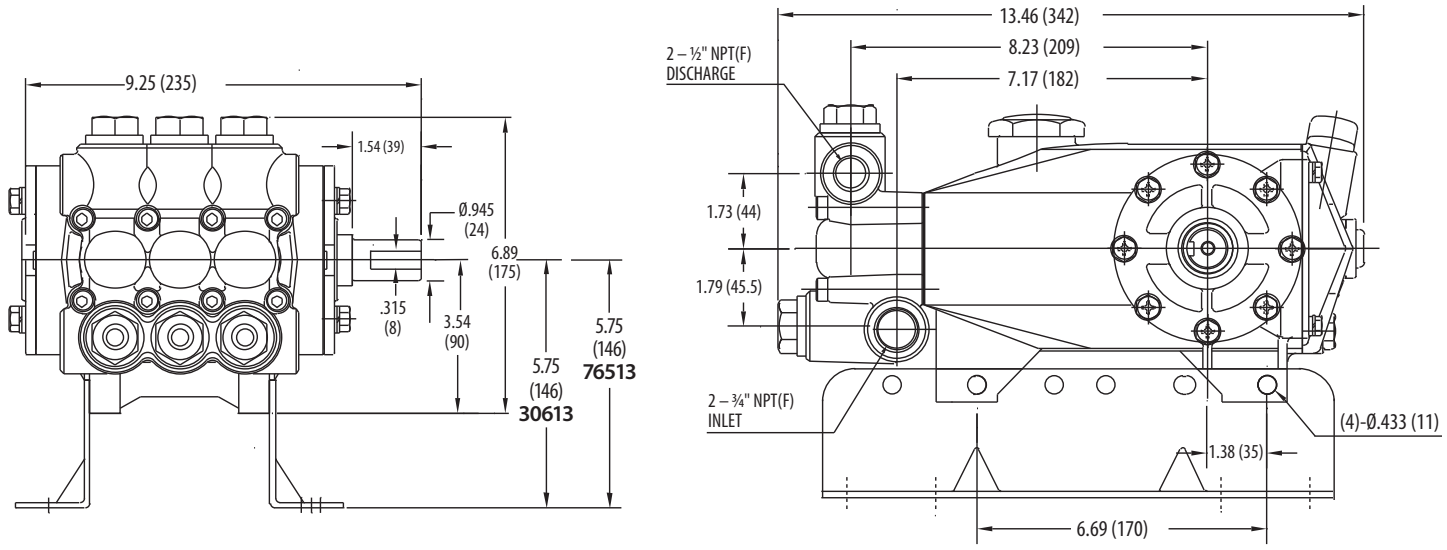

Models 7CP6111CS and 7CP6171CS

SEAL KITS One (1) seal kit required per pump

PUMP MODELS	NBR (STD)	FPM (.0110)	EPDM (.0220)◆	STHT (.3400)
7CP6111CS, 7CP6111CCS, 7CP6111CSG1 7CP6171CS, 7CP6171CSS	76933	76950	31936	76068

ITEM (Included in Seal Kits)					DESCRIPTION	QTY
97	17399	14160	46204	17399	O-Ring, Plunger Retainer	3
106	49644	49704	48650	76704	Seal, LPS with SS-Spg	3
121	13984	14333	48649	13984	O-Ring, Seal Case	3
127	48278	48278	48278	48278	V-Packing	6

◆ Silicone oil/grease required
*Review material codes for individual items (STG generally maybe used as alternative)

VALVE KITS Two (2) valve kits required per pump

PUMP MODELS	NBR (STD) STHT (.3400)	FPM (.0110)	EPDM (.0220)◆
7CP6111CS, 7CP6111CCS, 7CP6111CSG1 7CP6171CS, 7CP6171CSS	76387	76940	76258

ITEM (Included in Valve Kits)				DESCRIPTION	QTY
162	43248	43248	43248	Back-up Ring, Valve Seat	3
163	43249	44383	46206	O-Ring, Valve Seat	3
164	44037	44037	44037	Seat	3
166	44038	44038	44038	Valve	3
167	44039	44039	44039	Spring	3
168	44564	44564	44564	Retainer, Spring	3
172	17617	11691	46207	O-Ring, Valve Plug	3

◆ Silicone oil/grease required

⚠ CAUTIONS AND WARNINGS
All high-pressure systems require a primary pressure regulating device (i.e. regulator, unloader) and a secondary pressure relief device (i.e. pop-off valve, relief valve). Failure to install such relief devices could result in personal injury or damage to pump or property. Cat Pumps does not assume any liability or responsibility for the operation of a customer's high-pressure system.

Read all CAUTIONS and WARNINGS before commencing service or operation of any high-pressure system. The CAUTIONS and WARNINGS are included in each Service Manual and with each Accessory Data sheet. CAUTIONS and WARNINGS can also be viewed online at www.catpumps.com/dynamic-literature/cautions-and-warnings or can be requested directly from Cat Pumps.

WARRANTY
View the Limited Warranty on-line at www.catpumps.com/literature/cat-pumps-limited-warranty

CAT PUMPS 1681 94th Lane N.E., Minneapolis, MN 55449-4324 P: (763) 780-5440 F: (763) 780-2958 E: techsupport@catpumps.com www.catpumps.com

PN 99DAT053 Rev C 20178 6/20