BELL HOUSINGS AND COUPLINGS

The Pumps with Nine Lives

Cat Pumps Bell Housing and Coupling Products

The Cat Pumps bell housings and couplings offer a simple and efficient solution for connecting your pump to an electric motor. Using a conventional drive coupling for transmission this method of assembly offers the user a compact pumping system. Our standard range will fit 90 to 160 frame motors and are fit for ATEX use. Take advantage of the convenience of direct-drive pumps with a prompt delivery from Cat Pumps.

Features and Benefits

- Pump mounts directly onto motor, eliminating the need for drive belts, guards and baseplate
- Fits to standard metric motors with B34 C-Din foot & flange face
- Prevents contact with moving parts, improving personal safety
- Compact design reduces installation space
- Simple self-alignment minimises side-loading on pump and motor shaft, extending bearing life
- Special finger-type coupling designed for extended life; tolerates high temperature and high running speeds
- All fixing screws included

Applications

- Pressure Washers
- Self-Serve Car Wash
- Car Wash Prep Units
- Washdown Systems
- Salt Water Desalination/SWRO
- Misting/Cooling/Fogging Systems
- Industrial High-Pressure Power Units

Motor pump combinations using 50Hz 4 pole

PUMP	IE3 MOTOR KW	FRAME	RPM	FLOW L/MIN	PRESSURE BAR	BELL HOUSING	COUPLING
230/1/7	2.2	100L	1450	7.3	105	30738	30736
3CP1130 3CP1231	3	L100L	1450	7.4	155	701724	30736
5CP3105CSS	4	112M	1450	8.0	245	701730	30721
740	7.5	132M	1450	9.0	345	704717	704627
3CP1241	4	112M	1450	11.4	140	701724	30736
5CP3110CSS	5.5	132S	1450	11.4	245	704726	703629
240/1/7	2.2	100L	1450	11.5	85	30738	30736
3CP1140	4	112M	1450	11.5	155	701724	30736
340/1/7	4	112M	1450	12.6	125	30715	30721
5CP6241CS	4	112M	1450	12.6	140	701730	30721
5CP2140	5.5	132S	1450	12.6	175	704726	703629
270/1/7	2.2	100L	1450	13.5	70	30738	30736
3CP1120 3CP1221	5.5	132S	1450	13.5	155	701724 & 703628	TBA
5CP3160CSS	7.5	132M	1450	13.7	245	704726	703629
5CP4120CSS	9.2	132M	1450	14.3	275	704726	703629
700	11	160M	1450	14.5	345	704709	704627
5CP3120CSS	7.5	132M	1450	15.0	210	704726	703629
5CP3120	7.5	132M	1450	15.0	245	701730	703629
45	7.5	132M	1450	15.0	245	709609	703629
60	9.2	132M	1450	15.0	275	704717	704627
350/1/7	4	112M	1450	16.0	105	30715	30721
5CP2150	5.5	132S	1450	16.0	140	704726	703629
5CP6251	5.5	132S	1450	16.0	140	704726	703629
5CP5120/CSS	9.2	132M	1450	19.0	210	704726	703629
550	9.2	132M	1450	19.0	210	704717	704627
5CP5140CSS	11	160M	1450	21.0	245	TBA	TBA
5CP6221	7.5	132M	1450	23.0	140	704726	703629
5CP6120	5.5	132S	1450	23.5	110	704726	703629
56	9.2	132M	1450	25.0	175	704717	704627
5CP6190	7.5	132M	1450	31.0	100	704726	703629
7CP6110/1	9.2	132M	1450	33.5	140	703664	704627
7CP6170/1	15	160L	1450	41.6	140	702580	704627

Motor pump combinations using 50Hz 6 Pole

PUMP	IE3 MOTOR KW	FRAME	RPM	FLOW L/MIN	PRESSURE BAR	BELL HOUSING	COUPLING
230/1/7	1.1	90L	950	4.8	105	30743	30720
3CP1130 3CP1231	1.5	100L	950	4.8	155	30738	30736
5CP3105CSS	3	132S	950	5.3	245	704726	703629
740	4	132M	950	5.8	345	704717	704627
3CP1241	2.2	112M	950	7.5	140	701724	30736
5CP3110CSS	4	132M	950	7.5	245	704726	703629
240/1/7	1.5	100L	950	7.5	85	30738	30736
3CP1140	3	132S	950	7.5	155	701724 & 703628	TBA
57	7.5	160M	950	12.5	275	704709	704627
340/1/7	2.2	112M	950	8.3	125	30715	30721
5CP6241CS	2.2	112M	950	8.0	140	701730	30721
5CP2140	3	132S	950	8.3	175	704726	703629
270/1/7	1.5	100L	950	8.8	70	30738	30736
3CP1120 3CP1221	3	132S	950	8.8	155	701724 & 703628	TBA
5CP3160CSS	5.5	132M	950	9.0	245	704726	703629
5CP4120CSS	5.5	132M	950	9.4	275	704726	703629
700	7.5	160M	950	9.5	345	704709	704627
310/1/7	5.5	132M	950	15.0	155	709609	703629
5CP2120	5.5	132M	950	15.0	175	704726	703629
5CP3120CSS	4	132M	950	9.5	210	704726	703629
5CP3120	5.5	132M	950	9.8	245	704726	703629
45	5.5	132M	950	9.8	245	709609	703629
60	5.5	132M	950	9.8	275	704717	704627
350/1/7	3	132S	950	10.5	105	709609	703629
5CP2150	3	132S	950	10.5	140	704726	703629
5CP6251	3	132S	950	10.5	140	704726	703629
530	7.5	160M	950	16.4	175	704709	704627
5CP5120/CSS	5.5	132M	950	12.4	210	704726	703629
550	5.5	132M	950	12.4	210	704717	704627
5CP5140CSS	7.5	160M	950	13.8	245	TBA	TBA
5CP6221	4	132M	950	14.5	140	704726	703629
5CP6120	4	132M	950	15.4	110	704726	703629
56	5.5	132M	950	16.0	175	704717	704627
5CP6190	4	132M	950	20.0	100	704726	703629
7CP6110/1	7.5	160M	950	22.0	140	702580	704627
7CP6170/1	7.5	160M	950	27.0	140	702580	704627

Installation Instructions

1. Remove the screws from the bearing case on the side of the pump to which Bell-Housing will be fitted.
2. Slip the Bell-Housing over the pump shaft with the slots to the sides and the drain slot at the bottom.
3. Apply medium-strength thread-locking adhesive (e.g. Loctite™ 242) to the threads of the new longer screws supplied. Fit lock-washers to screws, insert and tighten to a torque of 5.5 Nm.
4. Apply a film of anti-seize lubricant to the pump shaft and insert key (supplied with pump) into the shaft keyway.
5. Separate the shaft coupling halves and press one half onto the pump shaft leaving a space 'X' between coupling and shoulder on shaft, see drawing & table. Where (#) is shown, consult local Cat Pumps office.
6. Tighten the set screw to a torque of 15 - 19 Nm
7. Apply a film of anti-seize lubricant to motor shaft and insert key (supplied with motor) into the motor shaft keyway.
8. Press second half of flexible coupling onto motor shaft but do not tighten set-screw yet.
9. If using Adapter Flange, secure flange to motor face using bolts supplied.
10. Mount pump and bell-housing assembly onto motor face. Slip lock-washers onto bolts, insert and tighten evenly to a torque of 12 Nm.
11. To secure coupling to motor shaft, first insert two screwdrivers through bell-housing slots from opposite sides and push the two halves of the coupling towards each other but leaving a gap of 1 mm, see drawing.
12. Rotate motor shaft so set screw is accessible through slot in bell-housing and tighten screw to a torque of 15 - 19 Nm. Check that shaft turns without binding.

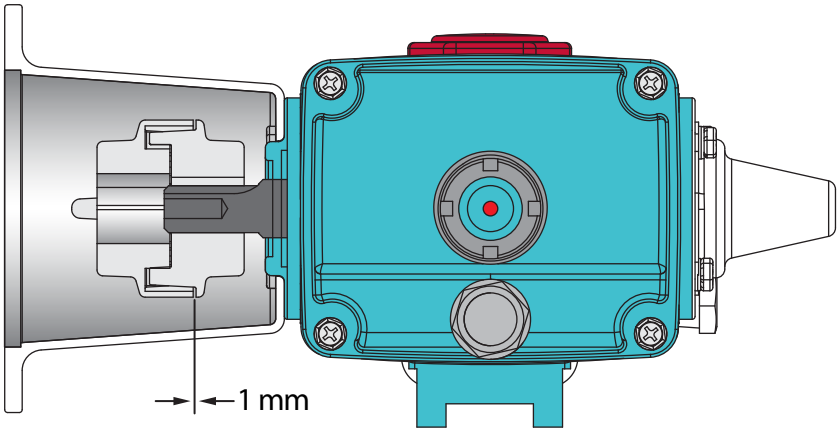

The Pumps with Nine Lives

CAT PUMPS (U.K.) LTD.
1 FLEET BUSINESS PARK, SANDY LANE, CHURCH CROOKHAM
FLEET, HAMPSHIRE GU52 8BF, ENGLAND
P: +44 1252 622031 • F: +44 1252 626655
sales@catpumps.co.uk • technical@catpumps.co.uk • www.catpumps.co.uk

©2016 Cat Pumps Inc. All rights reserved. All written and visual data contained in this document are based on the latest product information available at the time of publication.
Cat Pumps reserves the right to make changes at any time without notice. All other brand names or marks are used for identification purposes and are trademarks of their respective owners.

PN 99SSTUK007 Rev A 10/16